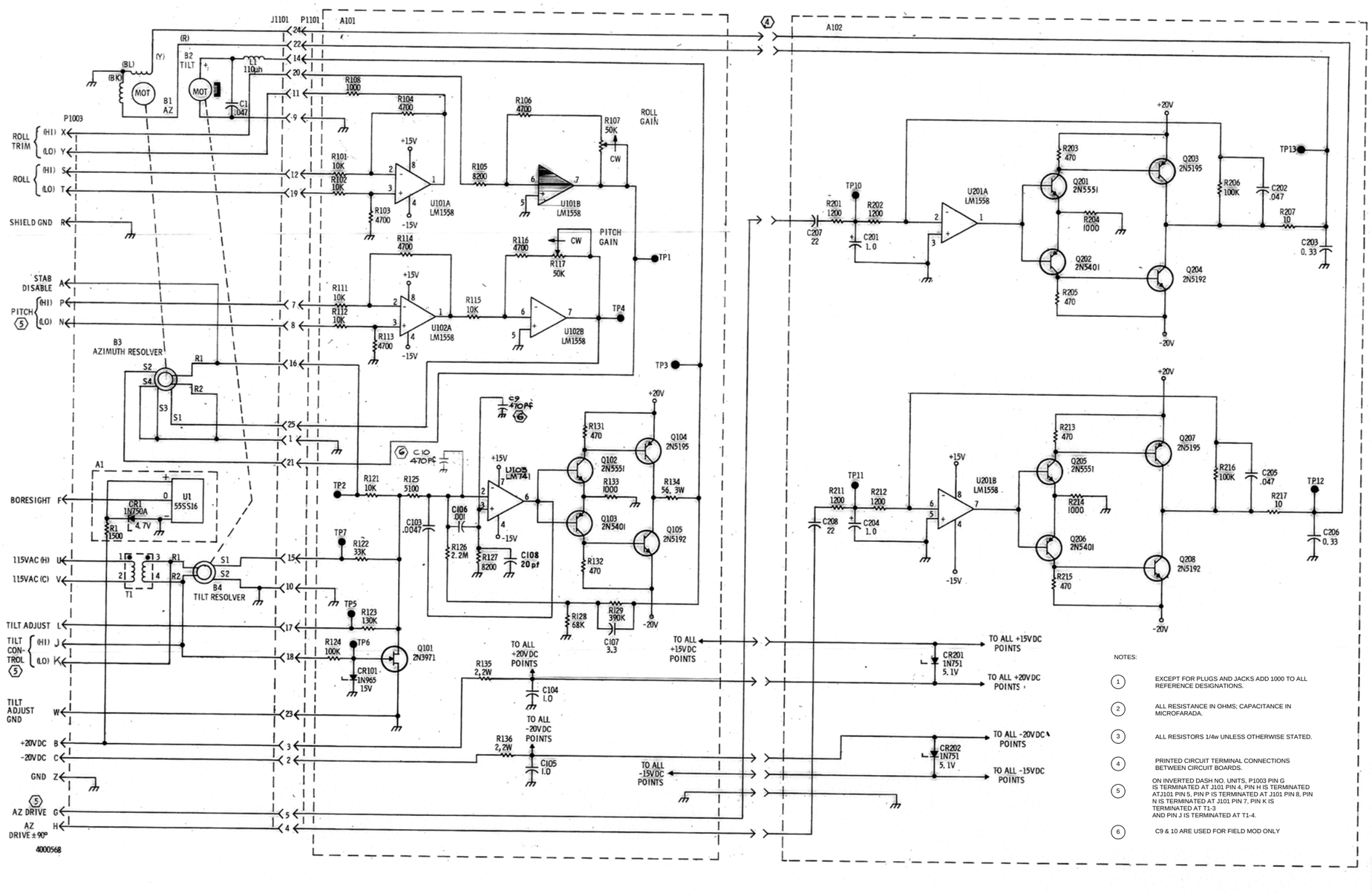

NOTES:

1. EXCEPT FOR PLUGS AND JACKS ADD 1000 TO ALL REFERENCE DESIGNATIONS.
2. ALL RESISTANCE IN OHMS; CAPACITANCE IN MICROFARADA.
3. ALL RESISTORS 1/4w UNLESS OTHERWISE STATED.
4. PRINTED CIRCUIT TERMINAL CONNECTIONS BETWEEN CIRCUIT BOARDS.
5. ON INVERTED DASH NO. UNITS, P1003 PIN G IS TERMINATED AT J101 PIN 4, PIN H IS TERMINATED ATJ101 PIN 5, PIN P IS TERMINATED AT J101 PIN 8, PIN N IS TERMINATED AT J101 PIN 7, PIN K IS TERMINATED AT T1-3 AND PIN J IS TERMINATED AT T1-4.
6. C9 & 10 ARE USED FOR FIELD MOD ONLY